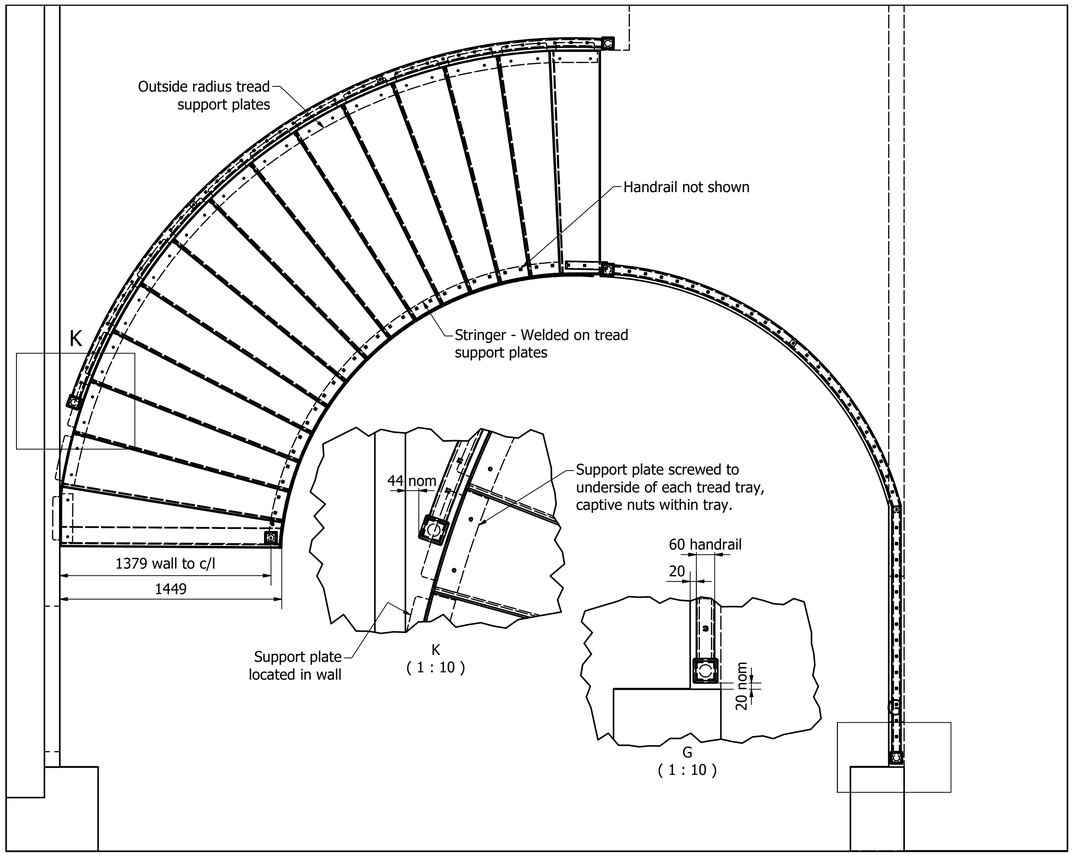

Plan
(1 :20)

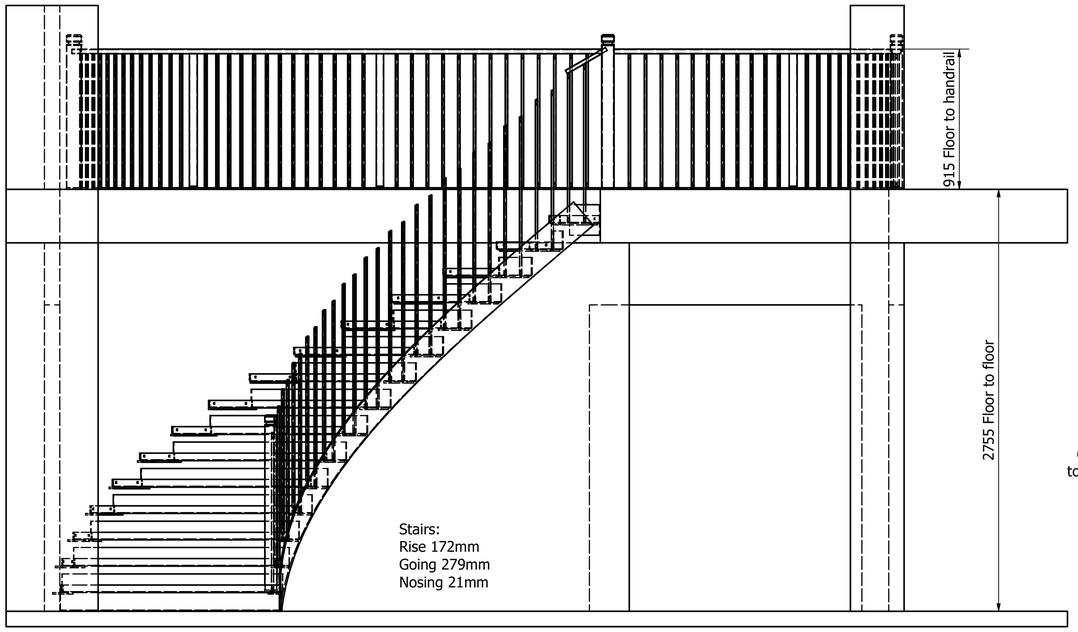

Front Elevation
(1 :20)

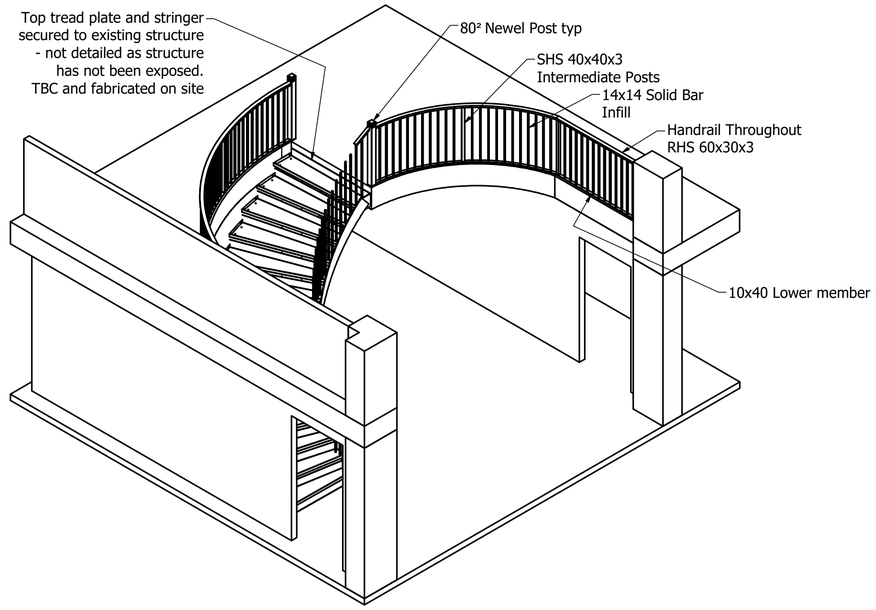

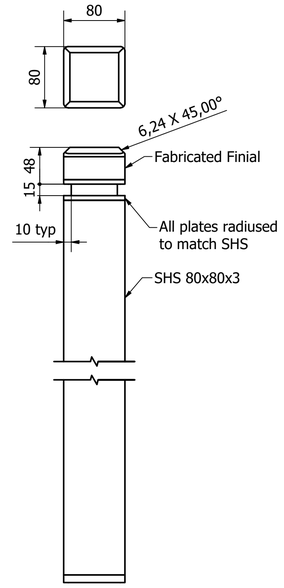

Post Detail
(1 : 4)

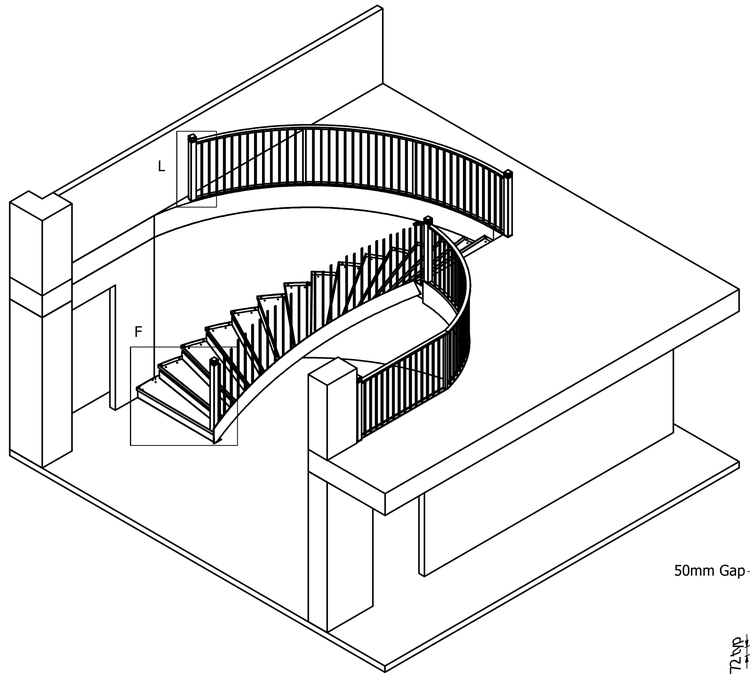

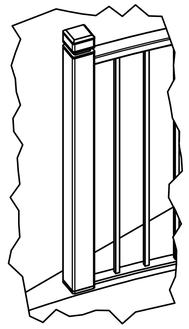

L (1 : 10)

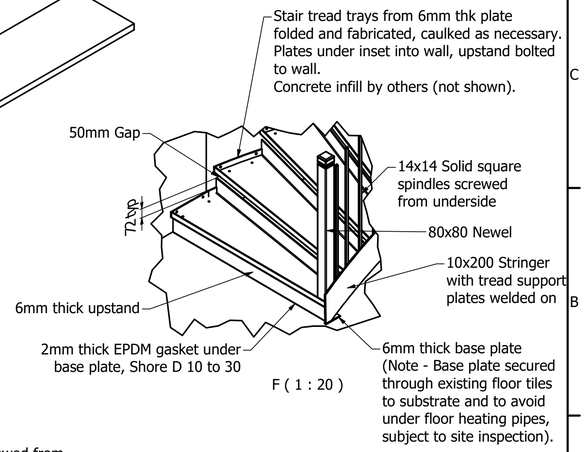

F (1 : 20)

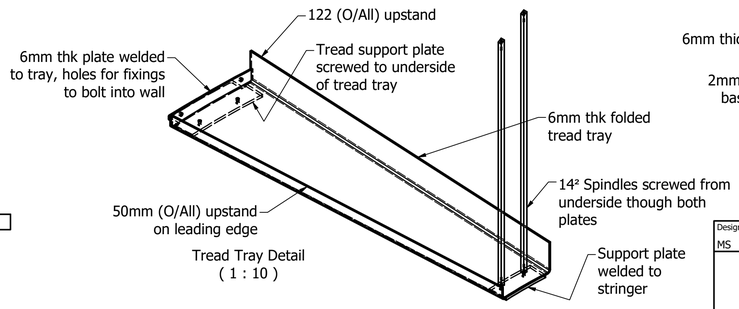

Tread Tray Detail
(1 : 10)

Designed by	Checked by	Approved by	Date		Date
MS	JT				08/06/2021

NF 2869
Cavokay
Henstridge

NF2869-01-001

Edition: A

Sheet: 1 / 1